two

Sustainable Housing Principles

2.4 Environmental Sustainability

DESIGN GUIDELINES

FOR SUSTAINABLE HOUSING & LIVEABLE NEIGHBOURHOODS

on behalf of the South Australian Housing Trust

Government of South Australia
SA Housing Authority

2.4 ENVIRONMENTAL SUSTAINABILITY

CONTENTS

Copyright

INTRODUCTION

Background

Established in July 2018, the SA Housing Authority (SAHA) is a statutory corporation that administers the South Australian Housing Trust (SAHT) Act 1995.

The SAHA consolidates housing-related services and management of the housing stock; including strategy, service delivery, assets and related corporate supports; and plays a key role in enabling and supporting the State's modern, multi-provider housing system and in establishing an environment that promotes shared responsibility and ownership.

The Authority is committed to providing housing that is socially and environmentally affordable and sustainable. To help achieve this, a suite of design guidelines for sustainable housing and liveable neighbourhoods that are applicable to all types of new residential construction, both rental and affordable have been developed.

The suite of design guidelines comprise the following:

1.1 House Design Guide

1.2 Amenity Targets

1.3 Apartment Design BCA Class 2 Construction

1.4 Housing Accommodation Schedules

1.5 Affordable and Market Housing

2.1 Land Titling and Service Infrastructure

2.2 Design Guidelines for Site Layouts

2.3 SAHT Universal Housing Design Criteria

2.4 Environmental Sustainability

3.1 Neighbourhood Renewal

3.2 Row and Terrace House Design

4.1 Housing Modifications

4.2 Generic Design Guidelines for House Renovations

Designers must understand and incorporate the requirements of these guidelines on all residential projects that involve land and properties owned by the SAHT. These guidelines assist designers in the interpretation of current policies and practices and include applicable features of the Good Design Guide SA historically published by Planning SA.

Some design compromise is acceptable to take into account site constraints and local planning conditions. All designs will be considered by the SAHA on merit. However, the minimum spatial dimensions needed to meet universal housing living requirements are generally not negotiable.

2.4 ENVIRONMENTAL SUSTAINABILITY

This Design Guideline

The SAHT is committed to developing sustainable communities with environmental sustainability a major commitment. By targeting this important issue the SAHT will reduce the impact of urban development on the environment by identifying and appropriately managing within its finite resources and funding its activities that aim to:

- Provide a sustainable physical environment for urban areas;
- Provide a sustainable environment for current and future tenants and private residents;
- Where practicable exceed the requirements of Federal, State and Local government legislation, standards, regulations and codes of practice;
- Seek to continually improve on current methods of environmental management through internal experience and consultation;
- Develop community awareness and involvement in managing the environment; and
- Encourage the urban development and building industry to be aware of and be involved in advanced environmentally sustainable practices.

Within these aims the SAHT will reduce the impact of urban development on the environment through specific initiatives targeting:

- Energy efficiency;
- Water conservation;
- Urban wastewater management;
- Building construction and waste management;
- Noise and acoustics; and
- Built urban environment.

PASSIVE SOLAR DESIGN

Solar Radiation

The location and orientation of a house and its rooms should take advantage of the thermal, hygienic and psychological benefits of sunlight. In South Australia the management of solar radiation requires a balance between maximizing the winter sun penetration during cooler months and minimizing summer sun and overheating in warmer months.

Each individual site will vary in response to solar radiation with respect to latitude and climate. The SAHT currently provides housing in three main zones throughout South Australia with differing solar angles. The latitudes defining these zones equate to those first published by the CSIRO and are readily available documents.

Northern Zone Latitude 32.5 degrees south (exact for Port Augusta)

- Includes Port Augusta, Whyalla and Port Pirie.

Central Zone Latitude 35 degrees south (exact for Adelaide)

- Includes Adelaide, Murray Bridge and Port Lincoln.

South East Zone Latitude 37.5 degrees south (exact for Mount Gambier)

- Includes Kingston, Naracoorte and Mount Gambier.

Sun path diagrams from a resource such as *Sunshine & Shade in Australasia (CSIRO 1999)* should be used to establish the relevant sun angles for summer and winter seasons. Relevant sun angles for differing times of the day, and year, are necessary in the determination of siting a building for:

- Overshadowing to neighbouring dwellings and private open space; and
- Northern orientation to private open space and avoiding overshadowing from neighbouring buildings.

The orientation of individual rooms within a house should provide:

- Northern orientation and aspect to living rooms wherever possible; and
- Living rooms to open directly to private open space.

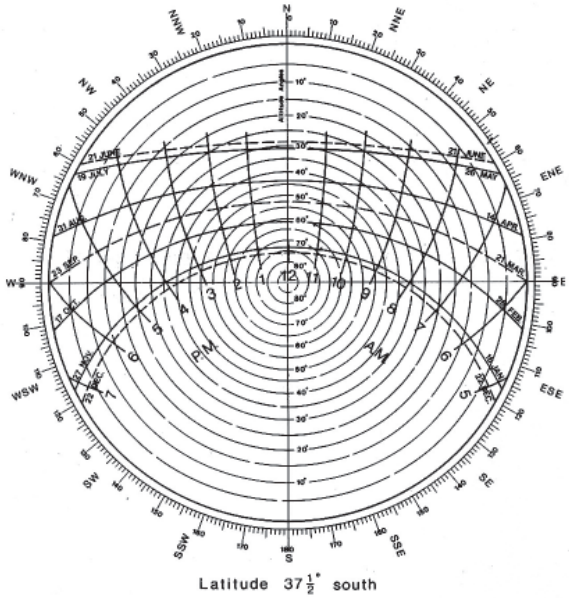

Figure 1: Sun Path Diagram

Example sun path diagram for Mount Gambier

Air Movement

Air movement affects the perceived temperature and greatly influences comfort. In temperate and warm arid regions, hot winds during summer can create a need for energy intensive means of cooling the interior of a building. In winter, cold winds can increase heat loss from houses and consequently raise the demand for energy intensive heating.

In most locations the predominant winter winds come from a different direction to those of the predominant summer winds, so blocking the winter winds does not conflict with the funnelling of cooling breezes.

Some attention should be given to existing vegetation as this forms the best wind protection screens. Generally, proposed new vegetation should be avoided as screening solutions due to the conflict in tenant or SAHT responsibility for landscaping / maintenance.

Passive Solar Heating

Passive solar heating refers to using solar energy to heat the interior spaces of a building without relying on mechanical devices that require additional energy. The Building Code of Australia (BCA) requires every new domestic building to comply with energy efficiency requirements aimed at reducing the demand on mechanical ventilation systems.

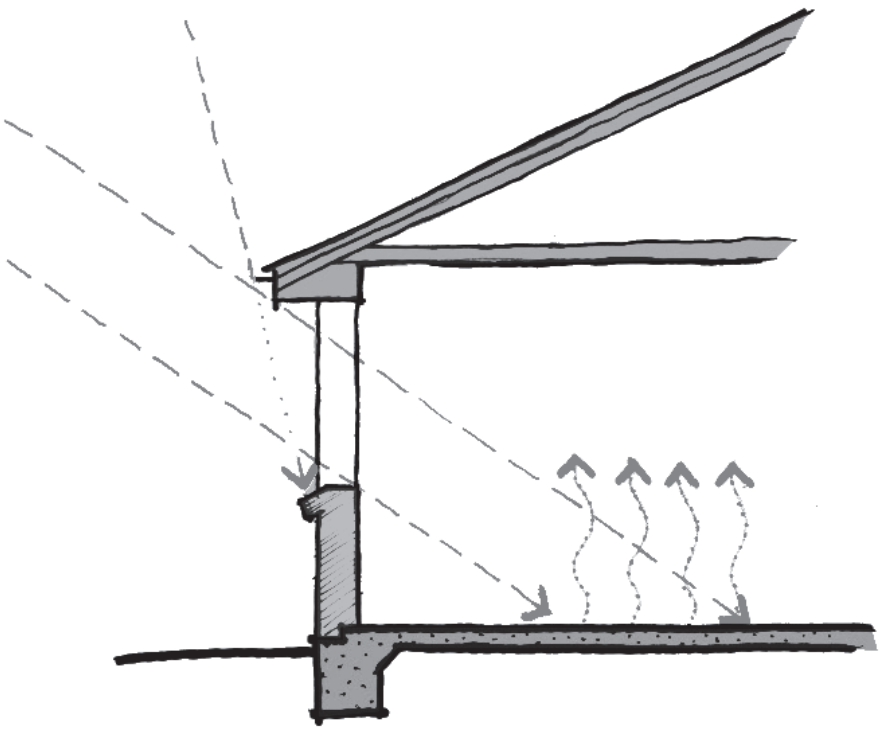

Figure 2 : Solar Penetration

Solar penetration heats concrete slab. Slab radiates heat during the colder nights.

SUN SHADING

Introduction

Shading devices shield windows and other glazed areas from direct sunlight in order to reduce glare and excessive solar heat gain in warm weather. Their effectiveness depends on their form and orientation relative to the position of the sun. A sun path diagram is essential in determining the position and altitude of the sun. Eaves overhang may provide some level of sun shading although horizontal shading is only generally effective on the northern façade. Eastern and Western façades can benefit from vertical shading devices. Southern façades generally do not need shading. Any sun shading device should be sympathetically designed within the overall building design.

Existing vegetation can also function as a sun shading device. Individual site conditions will affect this feasibility and must be investigated on a case by case basis. For example, shading a north wall (but not the roof top solar hot water collector) may be desirable in summer. Therefore, house location may be relevant to adjacent vegetation height.

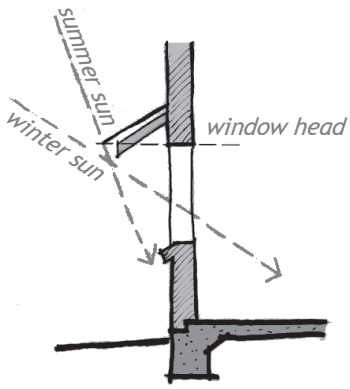

Figure 5 : Sun Hood

Northern elevation sun hood may match roof pitch. Generally sun shading below the window head should be avoided as it can restrict views and light.

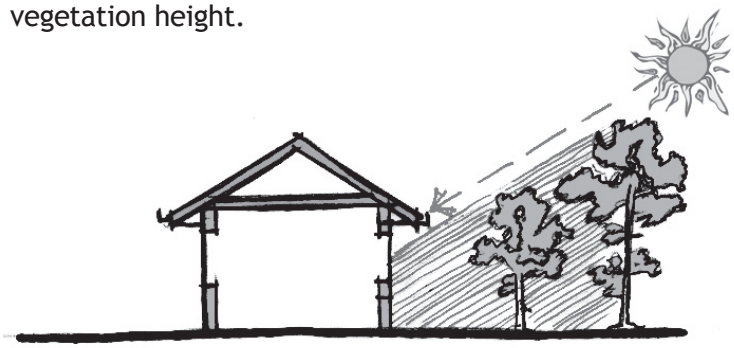

Figure 3 : Vegetation as Sun Shading

Sun shading may be provided by existing vegetation. Vegetation would need to be deciduous to allow the penetration of winter sun.

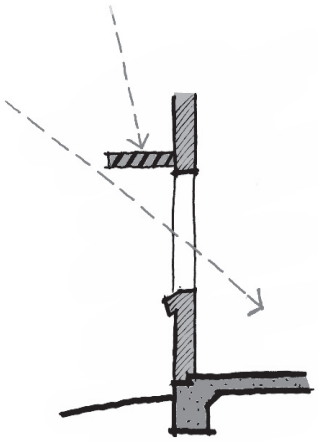

Figure 6 : Angled Louvers

Northern elevation angled louvres stop summer sun.

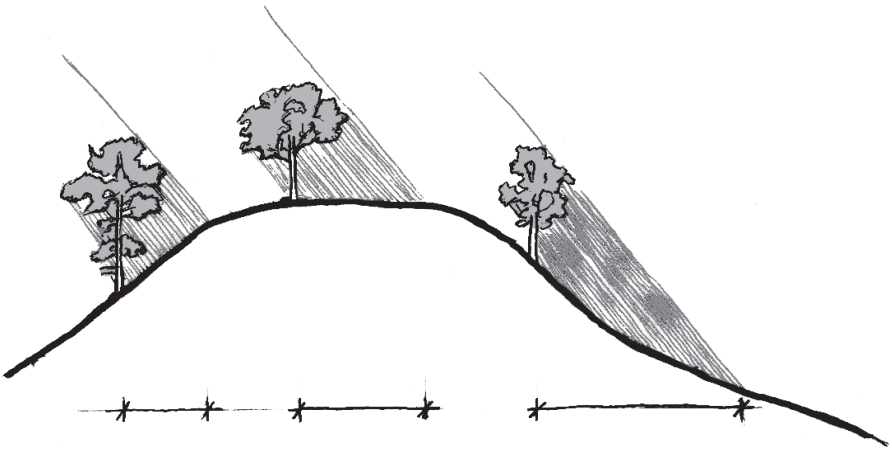

Figure 4 : Vegetation and Site Contours

Existing vegetation will cast different shadows depending on site contours.

Sun Shading Guidelines

Note: *The following information is intended as a guide only. The simple equation for eaves overhang below is only a quick check measure. Sun shading design can be a complex combination of a number of competing factors including - site location, site orientation, local climate, building occupant and design brief.*

The guide equation has been developed from the following sources and makes the following assumptions:

- Climate averages available from the 'Australian Government Bureau of Meteorology' with a summer shading season of above 26 degrees celcius for the monthly mean daily maximum temperature; and
- A brick veneer house with all window and sliding door heads to the underside of a 2100mm high eaves. North facing elevation only;

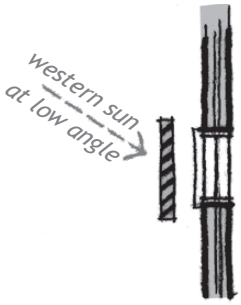

Plan view

Vertical louvre blades fixed or adjustable provide only oblique views from inside.

Section view

Figure 7: Western Sun Shading

Canopy and angled louvres stop western sun. Generally sun shading below the window head should be avoided as it can restrict views and light.

Northern Orientation

Northern orientation is generally regarded as the optimum position and location for living areas of houses. With the addition of living areas opening up to private open space, this provides the best opportunity to provide effective fixed sun shading for windows during the summer months and solar penetration during the winter months.

Conversely, the western elevations should be avoided. In the South Australian summer time the low angle of western afternoon sun provides unrelenting heat loads at the hottest period of the day.

Effective ways of reducing heat loads on western elevations include:

- Deciduous vegetation (trees);
- Vines on a vertical trellis (which may be combined with a pergola);
- Provision of vertical louvres (fixed architectural louvres can restrict views;
- External blinds on windows.

The SAHT does not provide these facilities and therefore prefers to avoid or minimise windows on west facing walls.

Houses orientated obliquely to compass points generally cannot take full advantage of fixed sun control devices and windows are further compromised by unavoidable penetration of low angle sun. Houses orientated within the quadrant 20 degrees West of North and 30 degrees East of North are preferred - refer to the figure 8B for details.

Note: *The 10 degrees discrepancy between these angles takes into account a time lag difference between morning and afternoon heat loads.*

Southern elevations generally require no shading although eaves overhangs and/or porches may still be required to provide protection from weather.

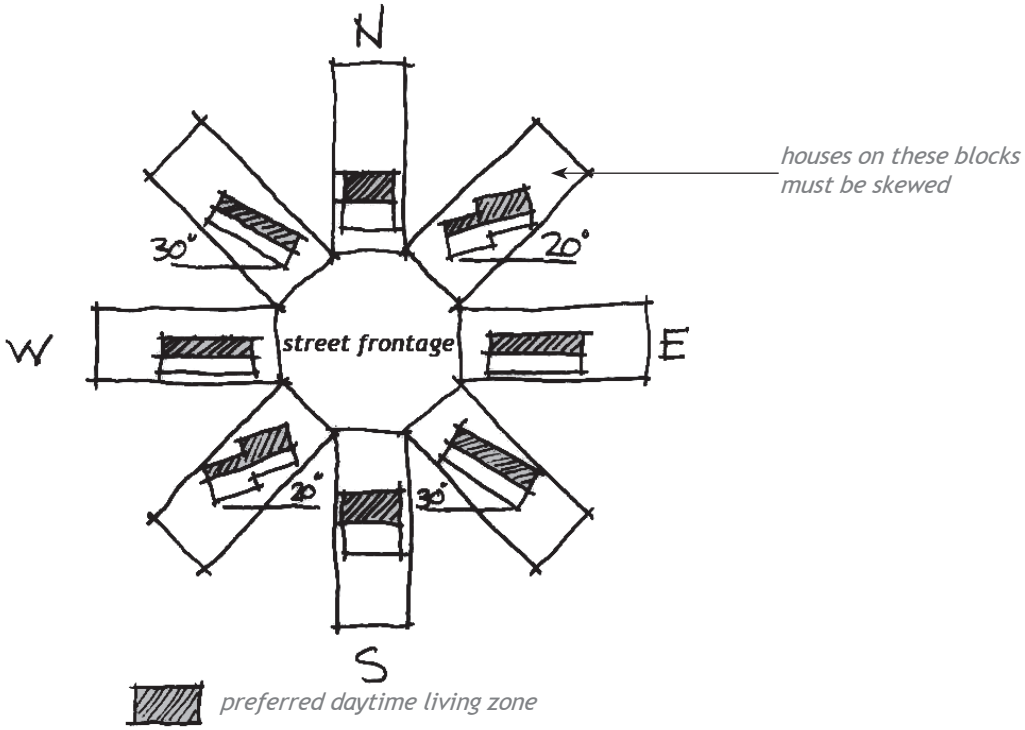

Figure 8A : Orientation of Allotments

Suggested northern orientation to houses on sites with varying aspects. For more information refer to Planning SA Guide 'Land division - how best practice land division can contribute to household energy efficiency'.

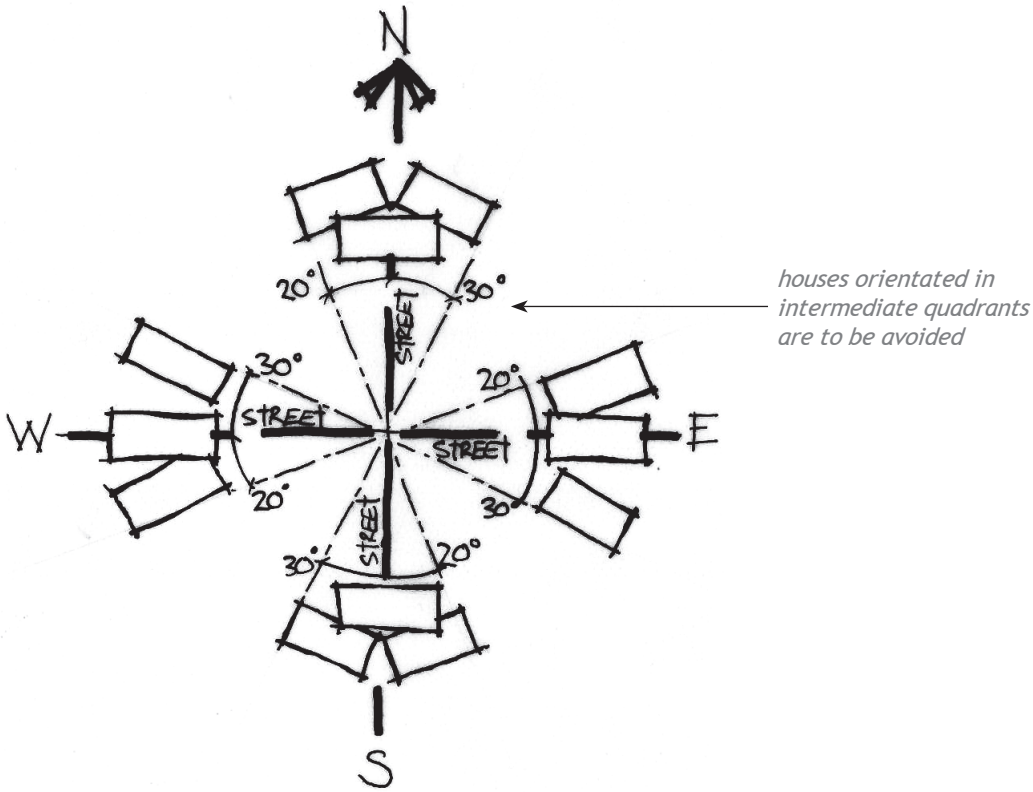

Figure 8B : Orientation of Houses

Eaves Overhang Equation

Divide the window height by the eaves ratio to establish the eaves overhang.

Window Height / Eaves Ratio = Eaves Overhang

Port Augusta

Window Height	Eaves Ratio	Eaves Overhang
1000mm	1.5	650mm
1500mm	1.5	1000mm
2100mm	1.5	1400mm

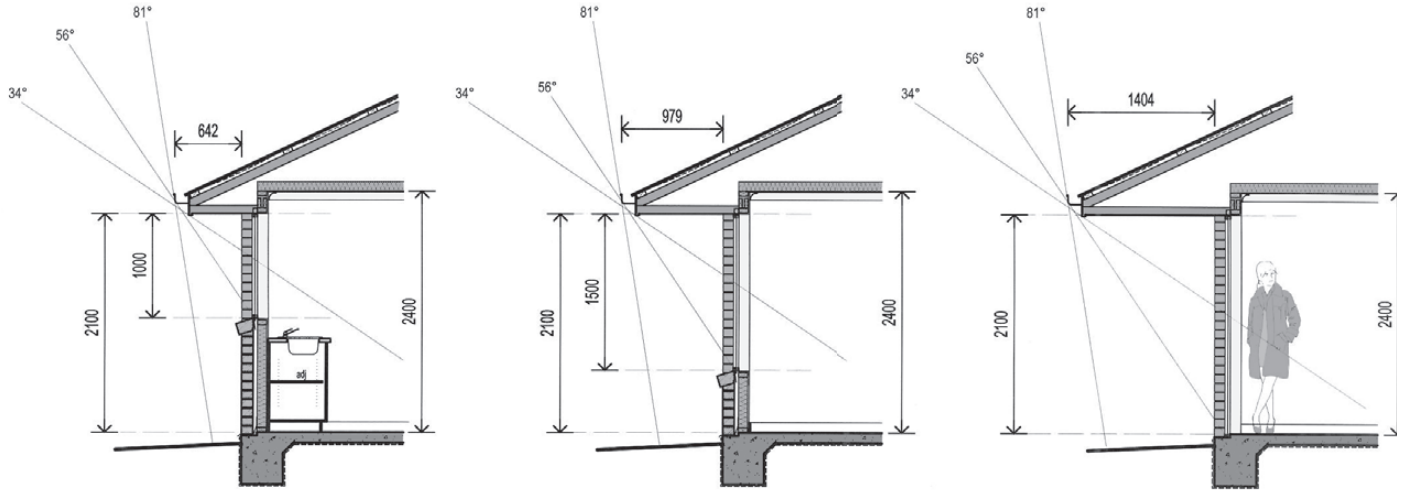

typical kitchen window 1000mm high

typical bedroom window 1500mm high

typical sliding door 2100mm high

Figure 9 : Port Augusta - eaves overhang

This diagram is based upon brick veneer construction with window and sliding door heads to the underside of a 2100mm high eaves. North facing elevation only.

Noon - Start & finish of summer shading - November 1 to March 30 - 56 Degrees
Noon - Mid Summer - 81 Degrees sun angle at midday
Noon - Mid Winter - 34 Degrees sun angle at midday

Adelaide

Window Height	Eaves Ratio	Eaves Overhang
1000mm	1.2	850mm
1500mm	1.2	1250mm
2100mm	1.2	1750mm

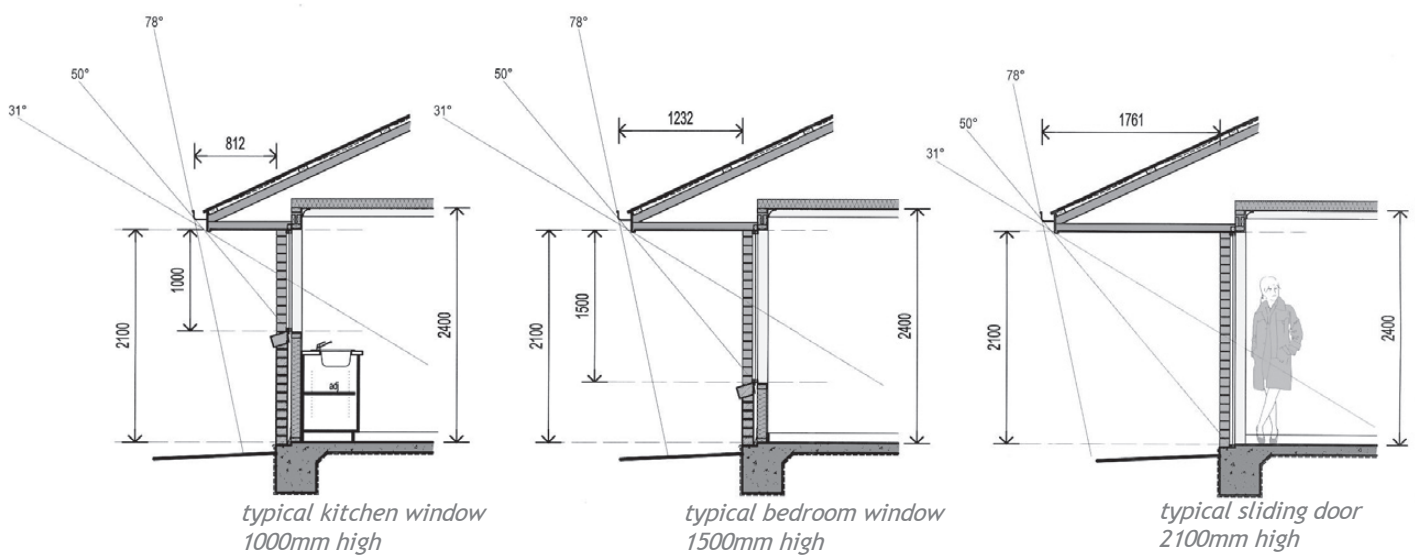

Figure 10 : Adelaide - eaves overhang

This diagram is based upon brick veneer construction with window and sliding door heads to the underside of a 2100mm high eaves. North facing elevation only.

Noon - Start & finish of summer shading - December 1 to March 30 - 50 Degrees
Noon - Mid Summer - 78 Degrees sun angle at midday
Noon - Mid Winter - 31 Degrees sun angle at midday

Mount Gambier

Window Height	Eaves Ratio	Eaves Overhang
1000mm	3.7	250mm
1500mm	3.7	400mm
2100mm	3.7	550mm

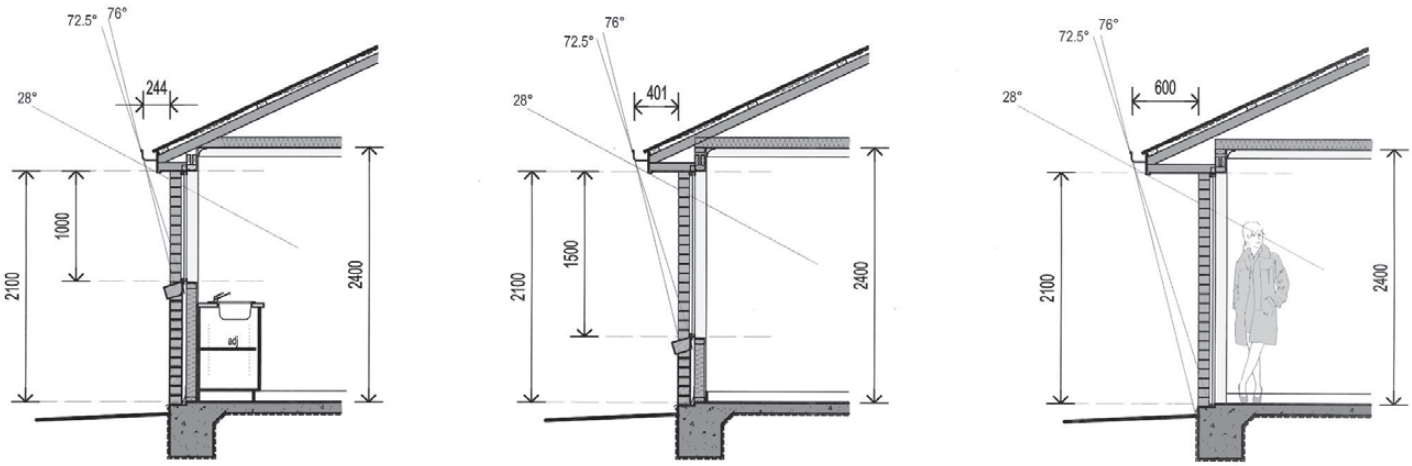

typical kitchen window 1000mm high

typical bedroom window 1500mm high

typical sliding door 2100mm high

Figure 11 : Mount Gambier - eaves overhang

This diagram is based upon brick veneer construction with window and sliding door heads to the underside of a 2100mm high eaves. North facing elevation only.

Noon - Start & finish of summer shading - January 1 to February 30 - 72.5 Degrees
Noon - Mid Summer - 76 Degrees sun angle at midday
Noon - Mid Winter - 28 Degrees sun angle at midday

Internal Layout and Zoning

The internal spaces of a dwelling should be designed so that rooms used most during the day obtain as much benefit from natural lighting, heating and cooling as possible. As a result living, dining, kitchen and family rooms (rooms with long periods of daytime use) should be located where possible on the northern side of the dwelling. Sleeping and service areas such as bathrooms and laundries (rooms that are used for short periods of time during the day) should be located where possible on the southern side of a dwelling. This will then reduce the energy that may be needed to supplement and maintain a comfortable living environment.

An open plan style designed for living spaces is desirable. Not only does it make the best use of all available space, it also allows light to penetrate easily and air to circulate freely around the dwelling. However, open areas should be designed so they can be reduced in size by closing doors, to minimise the areas that may require heating or cooling at any one time. Zoning can assist with conservation of energy. The grouping of rooms into similar use patterns or zones will allow heating and cooling resources to be focused on particular areas being used most frequently for that part of the day. Bathrooms, bedrooms and laundries would make up a typical zone, while living areas such as living rooms, kitchens and dining rooms would make another zone. Each zone would then be designed so that it could be isolated from the adjoining zones. For instance, during the day the living areas would be most frequently used and accordingly heated and cooled as necessary. The bedrooms would not be in use and therefore heating or cooling would not be required in this area of the dwelling.

Windows

The sun's rays pass easily through normal windows. This can provide welcome heat in winter, but can lead to overheating in summer. Ideally the majority of windows should be on the northern side of the dwelling to allow sun penetration into the dwelling to be maximised. Use minimum or zero glass on the eastern and western sides, and small glass areas on the southern side of the dwelling. The total window area should be less than 25% of the total floor area of the dwelling. If windows are made too large they can make the house uncomfortably hot in summer and hard to keep warm on cloudy winter days and nights. The following table indicates the recommended window area as a percentage of the wall area.

How much window area?	
Facing Direction	Recommended % of wall area
North	60
South	30
East	15
West	0-7

ENERGY EFFICIENCY

Overview

The pie chart (figure 12) shows a breakdown of the average energy use in a typical Australian household. Water heating and general heating and cooling are the two most energy intensive areas in most homes.

The strategies incorporated in this guideline are designed to produce an energy efficient house that:

- reduces the need for expensive heating and cooling appliances and systems;
- reduces appliance and system running costs, and therefore energy bills; and
- reduces energy related greenhouse gas emissions.

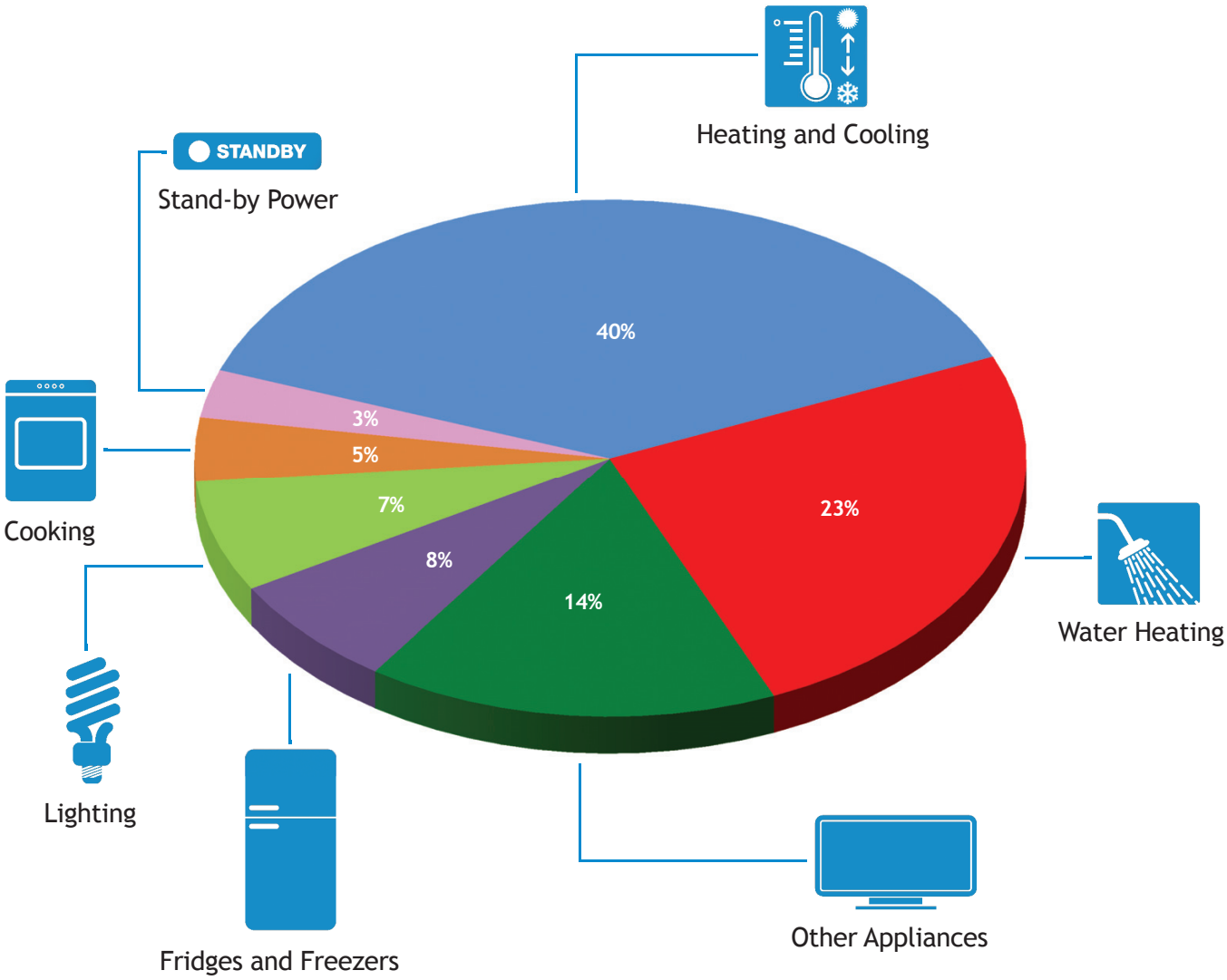

Figure 12: Average energy use in an Australian home

Chart sourced from the SA Government's Energy and Environment website

Insulation

The single most important measure to make a house energy efficient is the addition of insulation to the walls and ceilings. Insulation is the material that slows down heat transfer through the external surfaces of the home. In an uninsulated house approximately 40% of heat loss takes place through the roof and ceiling, whilst around 35% of heat is lost through walls and floors. As a result all new housing is to have as a minimum:

- R2.5 insulation material in the external walls; and
- R4.0 insulation material in the ceilings.

Fixtures and Fittings

All new plumbing fittings and fixtures are to be selected for their efficient use of resources and hence energy potential (through limiting the amount of water heated). This applies to the following:

- Shower roses to have a maximum flow rate of 9 litres per minute;
- Taps and outlets to have a 3 star rating; and
- Tap washers (provide a good maintenance free seal).

Hot Water System

Around one third of home energy use is associated with heating water – which is the largest single use of energy in the home. This use of heated water also contributes around 30% of household greenhouse gas emissions. To minimise this energy use:

- Install an energy efficient hot water system that complies with State Government requirements. For further information refer to the water heaters page on the State Government's website at *www.sa.gov.au/topics/energy-and-environment*.
- Ensure that bathrooms, laundry and kitchen are as close as possible to the hot water system; and
- Use insulation around external hot water pipes to reduce heat losses, especially the first few metres from the cylinder.

Electrical Appliances

For the energy rating of electrical appliances refer to the website at *www.energyrating.gov.au/calculator*.

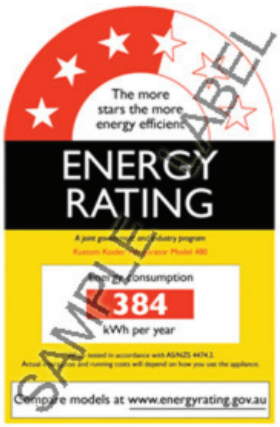

House Energy Rating

All new homes and extensions built in South Australia must achieve a 6 star level of energy efficiency with the requirements included in the BCA. To meet these requirements designers/builders can engage a qualified house energy rating assessor to undertake a house energy rating using a computer based energy rating program such as the FirstRate or AccuRate or alternatively, use the deemed to satisfy provisions in the BCA. The SAHT's preference is for the engagement of a qualified house energy rating assessor to undertake a house energy rating using an approved energy rating program.

Solar Photovoltaic (PV) Systems

The design of new dwellings should allow, where ever possible, for the future installation of grid connected solar PV systems including PV array up to 5kW, grid connected inverter, battery and battery gateway.

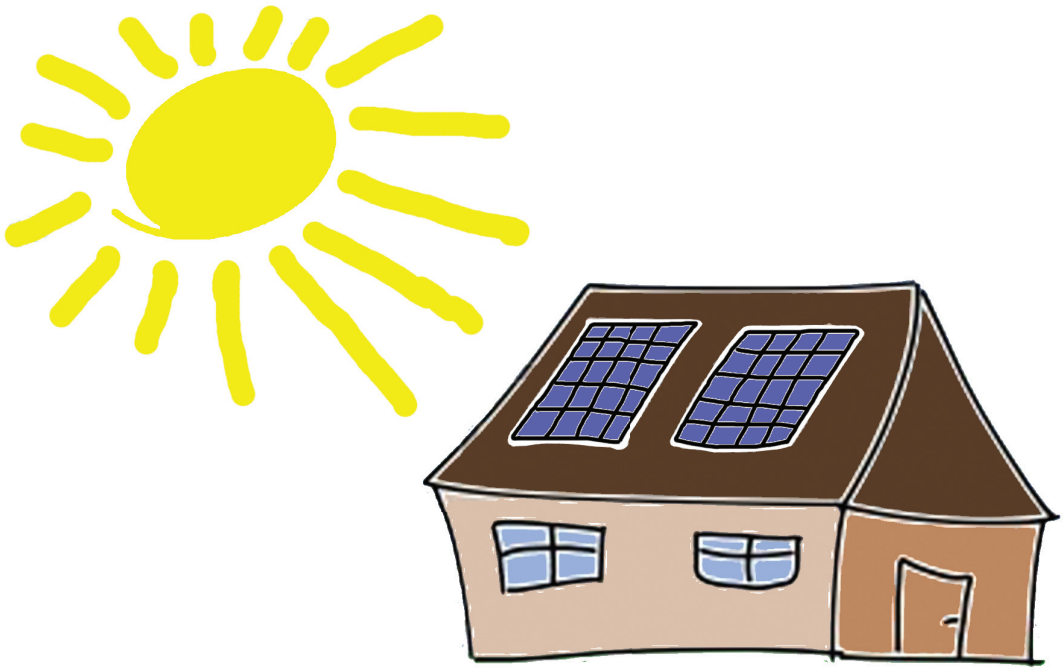

WATER CONSERVATION

Overview

The efficient use of water is vital for South Australia's environmental, social and economic well being. The pie chart (figure 13) shows a breakdown of water use in an average suburban South Australian home. As the pie chart shows, an average home uses about 280kL a year with garden and outdoor use and bath/shower/toilet accounting for approximately 75 percent of this use. The measures outlined in this guide will ensure that best practice water conservation principles are incorporated into SAHT owned housing.

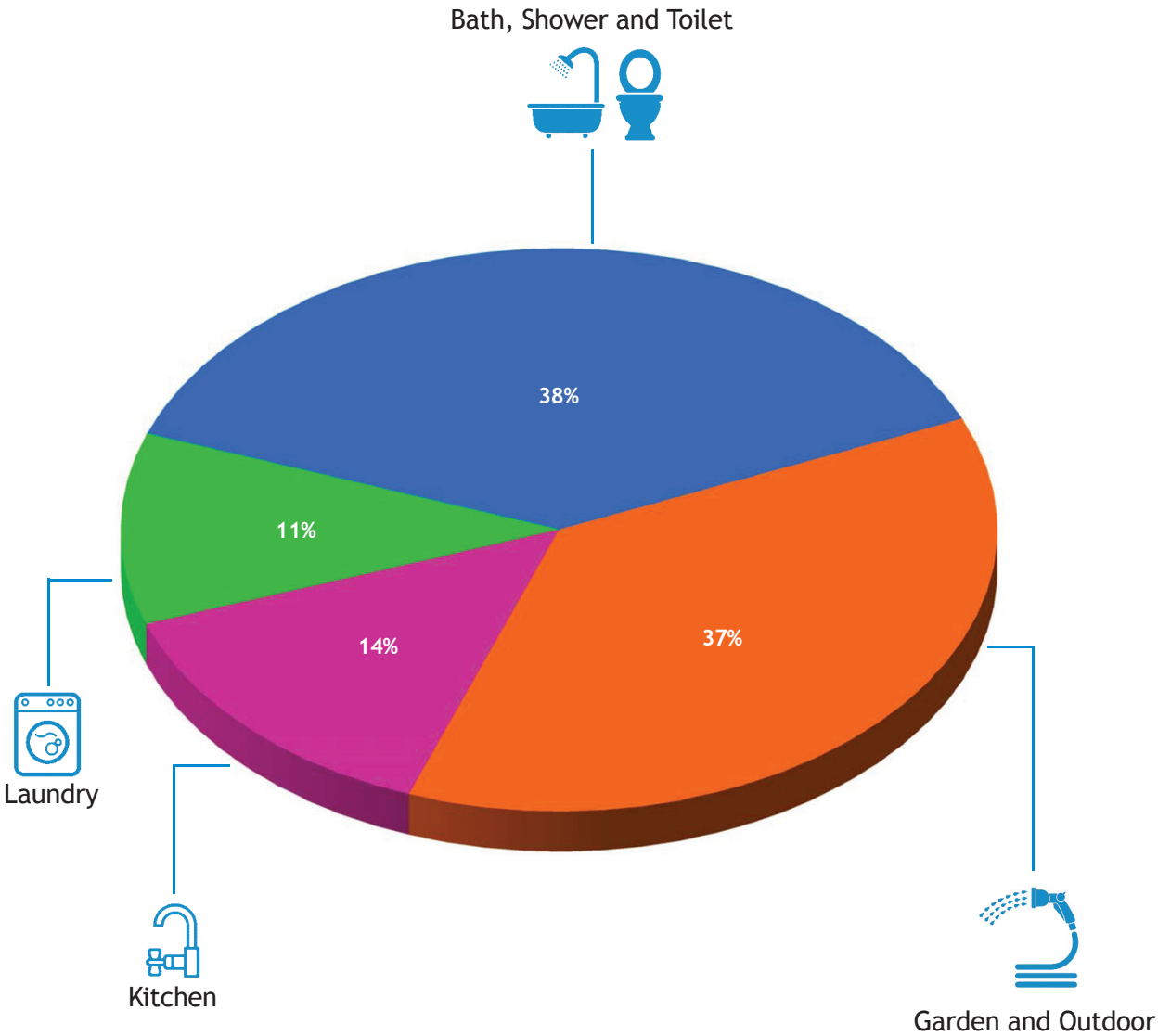

Figure 13: Water use in your home and garden

Data sourced from SA Water

Fixtures and Fittings

It is a requirement that the following products must have a minimum 3 star water efficiency labelling and standard scheme (WELS) rating:

- Toilets suites must also be dual flush;
- Shower heads to have a maximum flow rate of 9 litres per minute;
- Taps and tap outlets.

Landscaping

Approximately 40 percent of household water is used outdoors, much of which is wasted. Using water conservation techniques in the garden will save money, time and effort. In addition, it is even more important that any landscaping is designed so that water use is minimised and the plants and vegetation selected are drought tolerant. The measures to be considered in landscape planning and design include:

- Selection of appropriate plants and vegetation for the geographic area;
- Selection of appropriate plants and vegetation suited to the specific open areas (amount of sun/shade);
- Use of plants and vegetation that are drought tolerant and will require less water at all times;
- Minimisation of lawn areas. Where lawn is required drought tolerant species (eg Couch, Kikuyu, Buffalo and Paspalum) shall only be used; and
- Recommending the use of mulch in all garden bed areas to reduce evaporation, soil erosion and topsoil run off.

For further information refer to section on Native Flora and Fauna.

Irrigation Systems

Where installed (typically common garden areas within grouped housing sites), the design of irrigation systems should:

- Deliver the appropriate amount of water to the garden / landscaping;
- Minimise the loss of water; and
- Allow flexibility so as not to water at inappropriate times and conditions.

Advice should be sought on the selection and installation of an irrigation system most suited to the landscaping.

It should be noted that in times of drought the State Government may impose water restrictions that prohibit the use of these irrigation systems at certain times of the year. For further information on the use of irrigation systems refer to the SA Water website.

Rainwater Tanks

It is mandatory in South Australia that a rainwater tank is plumbed into a new dwelling. To comply, a 1,000 litre gravity fed tank that is plumbed to the toilet is required to be installed into SAHT owned dwellings. To ensure there is always sufficient water in the tank to flush the toilet, mains water will need to be connected to the tank to enable automatic top up of the tank water when water levels have reached a predetermined minimum level.

Water

Check with Council for local Water Industry development requirements in relation to rain water retention, detention or the use of recycled water.

Greywater Reuse

Greywater is wastewater from the hand basin, shower, bath, laundry and kitchen. Essentially, it is all household wastewater apart from the toilet (which is known as blackwater). Greywater may appear quite harmless, but it often contains harmful microorganisms. Direct contact with greywater should be avoided and greywater should not be stored for any length of time as it will turn septic, giving rise to offensive odours and providing conditions for microorganisms to multiply.

The SAHA is aware of the potential for reuse of greywater for residential purposes (primarily for watering gardens). However, the SAHA considers it more appropriate that greywater generated in SAHT properties be effectively managed, treated and reused through the established sewerage systems and treatment plants given:

- the potential health risks; and
- the need to effectively maintain and monitor the installed greywater system.

Blackwater Reuse

Blackwater is all household wastewater including the toilet. Blackwater requires biological or chemical treatment and disinfection before use.

Due to the potential health risks blackwater is not to be reused in SAHT properties. As for greywater all blackwater generated in SAHT properties is to be effectively managed, treated and reused through the established sewerage systems and treatment plants.

URBAN WASTEWATER MANAGEMENT

Overview

Stormwater acts as a carrier for a significant amount of pollution which is picked up from properties and public places, and transported through both street drains and kerb and gutter to our waterways and oceans. The water quality of urban run-off is typically poor because of the multitude of small pollution sources.

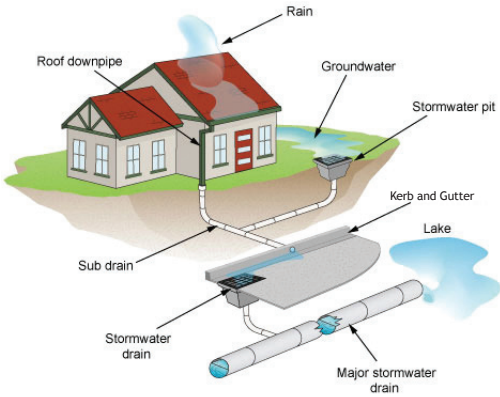

As a result the urban wastewater management initiatives are aiming to:

- Reduce and where possible eliminate the causes or sources of stormwater pollution (litter, vegetation and sediments);
- Reduce the volume of stormwater run-off from residential sites;
- Reduce the volume of mains water used on public reserves; and
- Manage stormwater as a valuable resource.

The measures detailed in this section will ensure that the initiatives outlined above will be effectively implemented on SAHT developments.

Stormwater Management Measures

The appropriate stormwater management measures should be determined on a project by project basis and in consultation with the relevant Council. Depending on the size of the project the appropriate stormwater management measures can either be at a catchment, neighbourhood or allotment level as follows:

Catchment Level

- Detention and/or retention basin;
- Wetlands and/or aquifer storage transfer and recovery;
- Upgrading of existing stormwater infrastructure;
- Gross pollutant traps.

Neighbourhood Level

- Detention basin;
- Aquifer storage transfer and recovery;
- Upgrading of existing stormwater infrastructure;
- Detention pipe storage;
- Gross pollutant traps;
- Bioretention and swales.

Allotment Level

- Rainwater tanks (detention and/or retention with or without reuse);
- Bioretention soakage beds and/or wells;
- Permeable paving.

Water Sensitive Urban Design

Water sensitive urban design (WSUD) promotes the sustainable use and re-use of water in urban development and buildings. This type of design integrates the total water cycle and water from all source, including rainwater, stormwater, groundwater, mains water and waste water, into urban development and building processes.

A very useful reference is the "Technical manual for Water Sensitive Urban Design in Greater Adelaide". This manual can be downloaded from *https://www.sa.gov.au/topics/planning-and-property/land-and-property-development/planning-professionals/water-sensitive-urban-design*. It includes information on legislative requirements, design processes and tools, construction, maintenance and operating requirements, case studies and a list of useful resources.

EPA's Code of Practice for Stormwater Pollution Prevention

All building and construction sites are to comply with:

- EPA's Stormwater Pollution Prevention Code of Practice for the Building and Construction Industry; and
- EPA's Handbook for Pollution Avoidance on Commercial and Residential Building Sites.

For further requirements refer to the land development and construction works section in this guide.

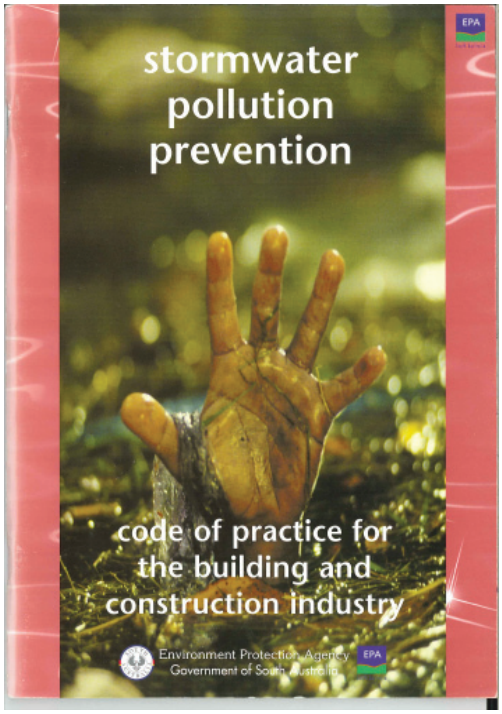

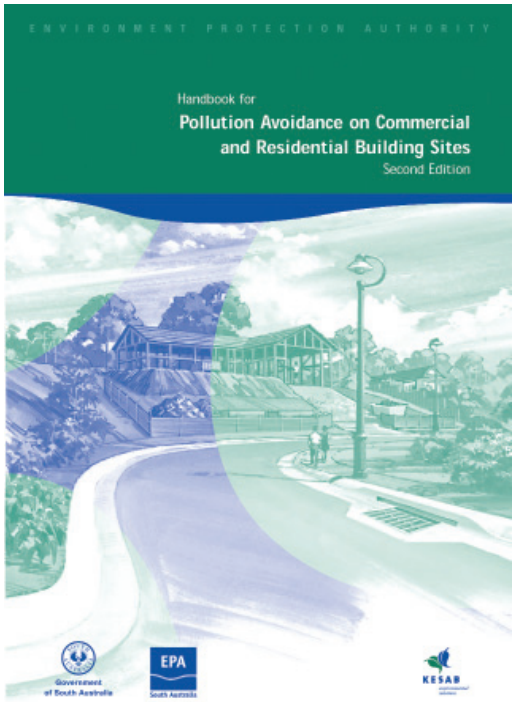

BUILDING CONSTRUCTION AND WASTE MANAGEMENT

Overview

Australians generate approximately one tonne of waste per person per year. Up to 40 per cent of this is building waste. Minimising and recycling this waste can have significant social, economic and environmental benefits. To be cost effective, waste minimisation strategies must be agreed to and implemented by all parties involved in building a home at the design, construction and operation stages.

The measures outlined in this guide will ensure this is effectively implemented within SAHT developments through:

- Minimisation and improved management of waste materials;
- Use of building materials that can be recycled and/or reused; and
- Implementation of site management and construction practices that are environmentally sensitive.

Asbestos Management

Buildings

Many of the dwellings earmarked for demolition have asbestos products. As a result any demolition work must comply with the following SAHT documents:

- Asbestos management policy and procedures; and
- Demolition policy and procedures.

Further information on asbestos is available from the government's website at *www.asbestos.sa.gov.au*

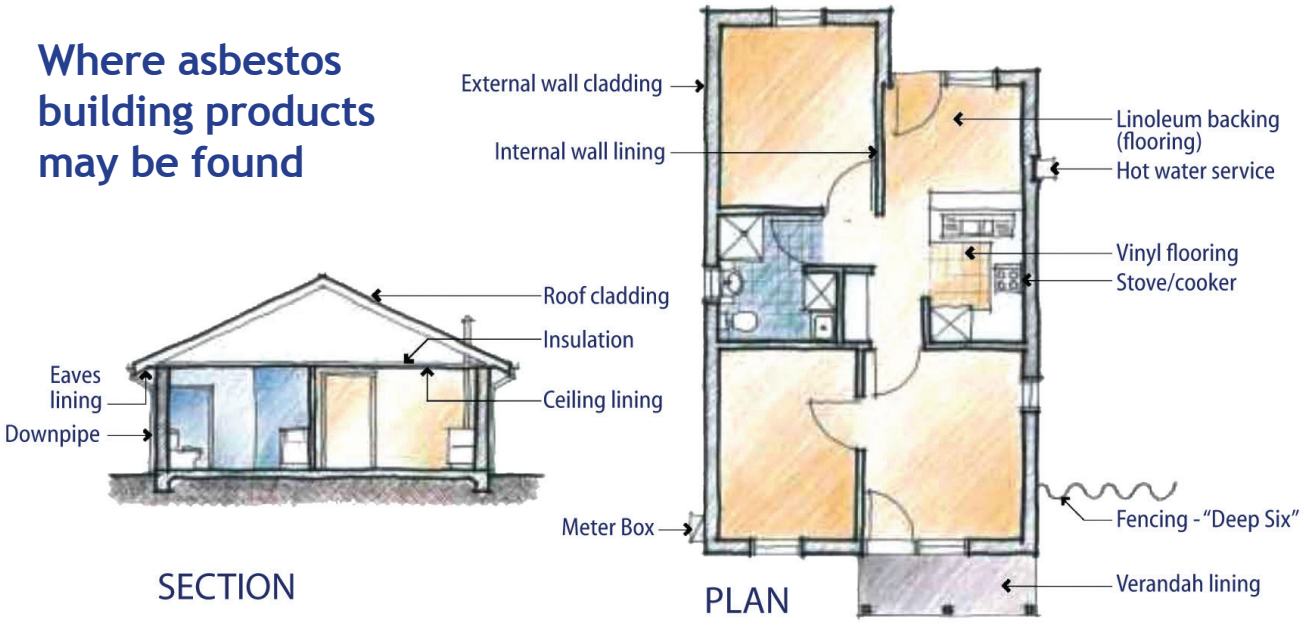

Civil works

For many urban renewal areas there exists a potential for asbestos products to be associated with the underground infrastructure. Project managers are to be made aware of this potential and in the types of product that asbestos may be present. Specific requirements need to be incorporated within the civil and building contract specifications for the identification and safe removal of any material containing asbestos.

Land Development and Construction Works

Demolitions

One of the key aspects associated with urban renewal projects is the extensive amount of waste material that is generated through the demolition of existing dwellings. Through the SAHT's Demolition Specifications, demolition contractors are required to minimise the amount of demolition materials and construction waste that ends up in land fill sites by recycling, reusing or converting to usable products.

Demolition activities must also be undertaken in a manner which does not allow demolished materials to enter the stormwater system. In addition uncovered work areas, storage, loading and unloading, plant and equipment cleaning areas and sediment and erosion control measures need to be in accordance with EPA requirements.

Management strategy for civil works

In order to minimise the potential pollution associated with any site development during the construction phase, the civil works design consultant will:

- Develop a management strategy and prepare a soil erosion and drainage management plan (SEDMP).

  The SEDMP will be in accordance with the Stormwater Pollution Prevention Code of Practice for the Building and Construction Industry and Handbook for Pollution Avoidance on Commercial and Residential Building Sites published by the Environment Protection Authority (EPA) in March 1999 and June 2004 respectively.
- Submit the SEDMP as part of the engineering documents for the land division to the relevant local council for approval, prior to construction commencing.

In order to minimise the potential pollution associated with any site development during construction, the Civil Works Contractor will implement the works shown on the SEDMP including liaising with the council at the commencement of the construction activities. The contractor will not commence construction until they are in receipt of the SEDMP approved by Council.

KESAB's Clean Sites Program

In association with the SEDMP, the civil works contractor will also be required to conform with KESAB's Clean Sites program.

Allotment Filling Material

All imported materials used to fill a SAHT site to design levels must be sourced from either a recognised quarry or from natural sources where there have been no potentially contaminating activities (PCA) as prescribed in the Environment Protection Regulations 2009.

Where the imported fill material is not being sourced from a recognised quarry the SAHT will require a statement/certification from either an EPA accredited environmental auditor or a suitably qualified environmental consultant that the proposed imported fill material has been assessed in accordance with EPA requirements as being suitable for use as fill on a residential site. In finding an appropriately experience environmental consultant refer to the section on EPA accredited auditors and certified practitioners in this guide.

Apart from the above environmental considerations the imported fill material may also need to meet specific aesthetic considerations and geotechnical requirements.

The contractor at the contractor's expense shall be responsible for providing all necessary certification for the imported fill material.

Notwithstanding these requirements, the SAHT reserves the right to reject any materials from non recognised quarry sources nominated by the contractor.

No fill material is to be brought onto a SAHT site until it has been approved by the SAHT. Any unauthorised fill will be preferably removed by the contractor as soon as practicable but under certain circumstances may be removed by the SAHT both at the contractor's expense.

Earthworks

All earthworks undertaken on a SAHT site will need to comply with the following Australian Standards:

- AS 3798 Guidelines on earthworks for commercial and residential developments; and
- AS 2870 Residential slabs and footings.

SOIL CONTAMINATION

Overview

The SAHA is undertaking a significant program of urban regeneration in metropolitan Adelaide through major urban regeneration projects within selected suburbs and a significant number of smaller scattered sites created through the demolition of existing SAHT properties. This program aims to deliver more appropriate housing to meet current needs as well as assisting in the development of more balanced and sustainable communities.

Potential exists for significant problems to arise where land has been rezoned or development approved on sites which have subsequently been found to have contamination problems. The public health and environmental risks associated with the redevelopment of contaminated land can be avoided through early identification of sites which may previously have been used for contaminating activities.

Residential Developments

Where a sensitive land use is proposed where a contaminating activity of a kind prescribed by regulation has occurred, the EPA expects the use of an independent Environmental Auditor (Contaminated Land), accredited by the EPA, to independently review the work undertaken by an suitably qualified and experienced environmental consultant and provide an expert opinion on the suitability of the site for its intended use.

For redevelopment or continuation of an existing residential site there is no requirement to use the above process. However to minimise any contamination issues affecting the redevelopment it is prudent that a risk based assessment be undertaken on these sites. This assessment involves undertaking a site history appraisal. This appraisal would assist in identifying any previous non residential uses and potential contamination activities that may adversely impact on the proposed redevelopment site.

The site history appraisal needs to be undertaken in general accordance with the National Environmental Protection (Assessment of Site Contamination) Measure 1999, Volume 3: Schedule B2, Guideline on Site Characterisation.

If the site history appraisal does not identify any potential significant issues then the development can proceed as planned, however if potential significant issues are identified then an environmental site assessment (including soil sampling and testing) will need to be undertaken prior to the development proceeding.

On the basis of the site history appraisal, the environmental site assessment (ESA) will need to be undertaken by an appropriately qualified environmental consultant in accordance with:

- AS 4482.1 Guide to the investigation and sampling of sites with potentially contaminated soil - - Non volatile and semi volatile compounds.

- AS 4482.2 Guide to the sampling and investigation of potentially contaminated soil - Volatile substances.
- National Environmental Protection (Assessment of Site Contamination) Measure 1999.

If the ESA does not identify any significant contamination then the development can proceed as planned. However, if contamination is identified then further investigations and the engagement of an environmental auditor may be required.

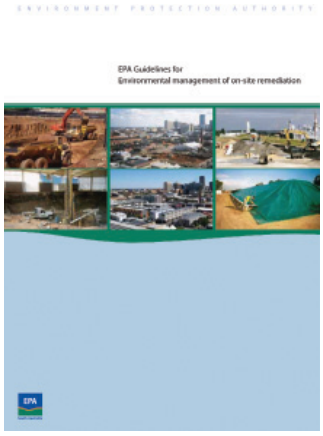

If remediation of a site is required refer to the EPA document titled 'EPA Guidelines for Environmental Management of on-site remediation' for appropriate advice on the environmental management of remediation activities so as to minimise any actual or potential adverse impacts and to provide adequate protection to the community.

EPA Accredited Auditor and Certified Practioners

The EPA has a panel of accredited environmental auditors and has a policy to recognise certification bodies and schemes which certify site contamination practitioners as suitably qualified and experienced professionals. As from 1 August 2019 the EPA has recognised the following two schemes:

- Australian Society of Soil Science - Certified professional soil scientist (contaminated site assessment and management) Scheme; or
- Environmental Institute of Australia and New Zealand - Certified environmental practitioner Scheme (site contamination).

The SAHT will only accept work and/or advice from an environmental consultant that is an EPA accredited auditor or is certified through one of these two recognised schemes.

Site Contamination Legislation

The Environment Protection Act 1993 was amended in 2007 in relation to site contamination to include provisions which assign responsibility for site contamination, establish a statutory audit system for South Australia and give the EPA powers to deal with site contamination.

This legislation forms part of a set of measures to ensure that site contamination is adequately managed in South Australia.

These measures comprise:

- The Environment Protection Act 1993;
- The Environment Protection Regulations 2009;
- A series of supporting EPA publications including codes of practice, guidelines and information sheets.
- Amendment to regulations under the Land and Business (Sale and Conveyancing) Act 1994 ; and
- Appropriate amendments to planning processes under the Planning, Development and Infrastructure Act 2016;

NOISE ABATEMENT

Overview

While construction activity is often inherently noisy, the general environmental duty under the Environment Protection Act requires all reasonable and practicable measures to be taken to prevent, or minimise, any unreasonable impacts.

Construction Noise

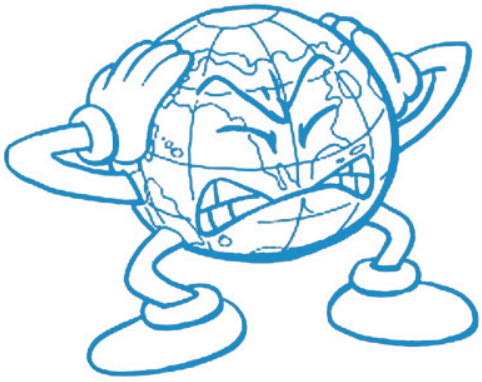

Construction noise is noise that arises from an activity at a construction site that includes:

- demolition work, site preparation work, and building maintenance or repair work; and
- the operation of vehicles within, entering or leaving a construction site; and
- any activities at, or within the immediate vicinity of a construction site, of persons who perform work at the site, or activity connected with work at the site.

Noise Control

All contractors working within a development must take all reasonable and practicable measures to minimise noise at all times in accordance with the Environment Protection Act 1993. The types of measures that satisfy this duty will be specific to each site, but will generally comply with the requirements as detailed within the noise control section in the EPA's Handbook for Pollution Avoidance on Commercial and Residential Building Sites published in June 2004.

BUILT URBAN ENVIRONMENT

Overview

Good urban design leads to quality public places that in turn have the capacity to revitalise neighbourhoods and reinforce a sense of place. As a result the designs for public places and their interaction with private buildings and spaces should reinforce the urban environment as liveable, efficient, creative, sustainable and socially inclusive.

Urban Design Principles

Good urban design is an integral component of the SAHT operations. As a result, the SAHT through working closely with Planning SA has developed a set of Sustainable Housing and Liveable Neighbourhoods guideline documents that incorporate good urban design principles.

Streetscape

The streetscape is the visual identity of a neighbourhood and plays an important role in facilitating interaction between residents and creating a community. The designed streetscape should encourage connection, understanding and community spirit among residences. The objectives to achieve this in urban development projects include:

- Ensuring the construction of buildings that assist the creation of an attractive streetscape;
- Provision of adequate space for landscaping;
- Provision of surveillance of public domains; and
- Protection of the amenity of adjoining properties.

Reserves

The SAHT is aware of the importance of reserves within redevelopment areas not only for recreation space but also for the general improvement of the urban landscape. In conjunction with the local council opportunities for enhancing existing reserves and the creation of new reserves should be explored within redevelopment areas. The incorporation of pedestrian access ways through the reserves should also be considered.

Regulated and Significant Trees

It is important to identify and retain where possible all regulated and significant trees within a development. Apart from these trees, trees and vegetation species suitable for transplanting elsewhere within a development should also be identified and retained where possible.

Native Flora and Fauna

Where practicable indigenous species are to be planted within reserves and other public places in the development. This will:

- Re-establish some of the native vegetation of SA lost due to human activity;
- Plant species that have a low environmental impact, low ongoing maintenance requirements and low allergenic properties; and
- Encourage biodiversity values by providing suitable habitat.

Public Transport

Where practicable roads, footpaths and accessways within reserve areas should be designed within development areas so as to encourage the use of existing public transport wherever possible. This may involve limiting the creation of new roads while retaining as many of the existing roads, the creation of new footpaths and the incorporation of pedestrian accessways within reserve areas.

All new pedestrian linkages are to be disability code compliant.

Government of South Australia
SA Housing Authority